VISIT…

LANZAROTE Caliente.COM

Receiver
Material: Steel

Scale: .7 : 1

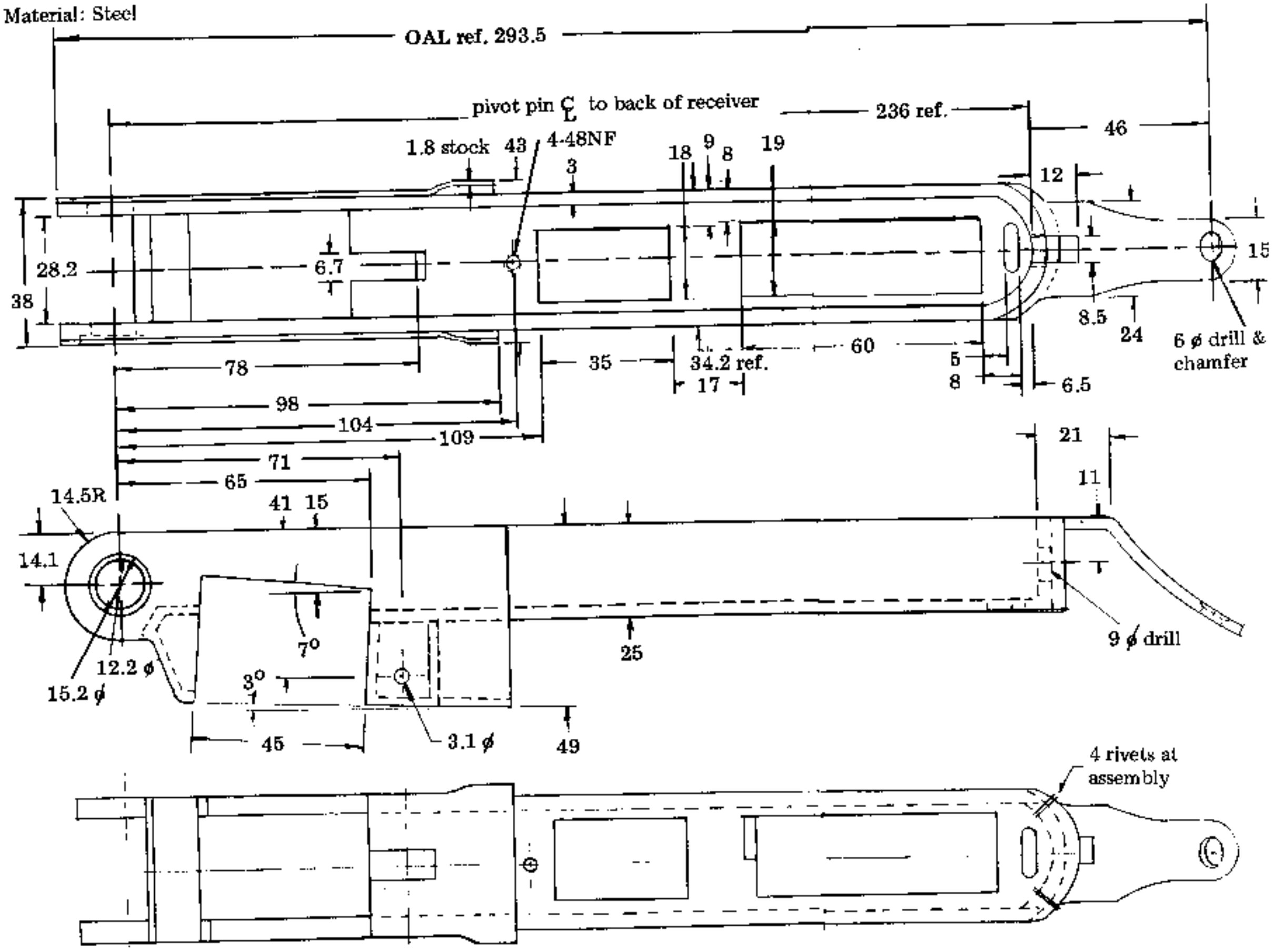

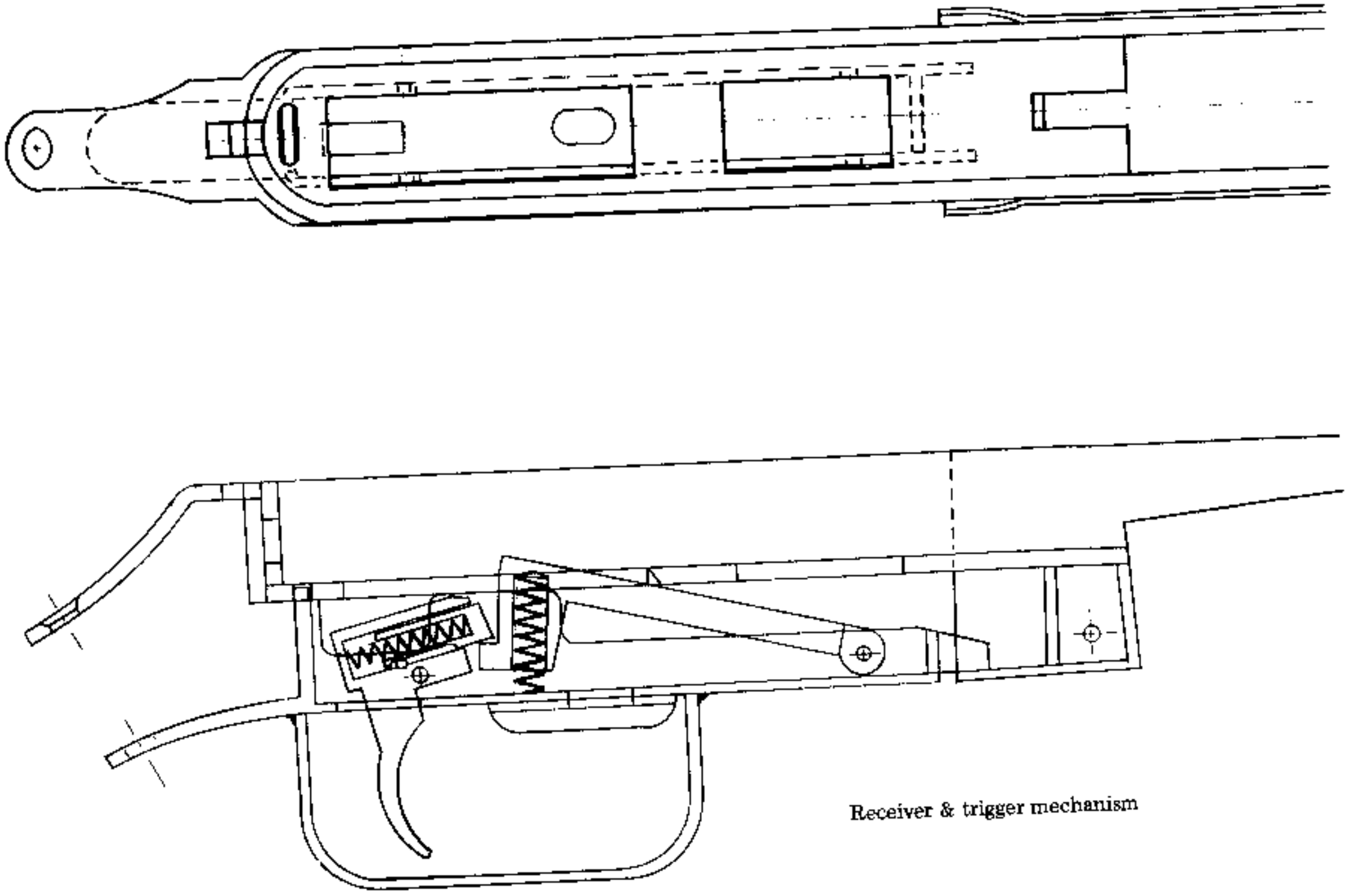

Receiver & trigger mechanism

Pivot block
Material: steel
Scale: 1 : 1

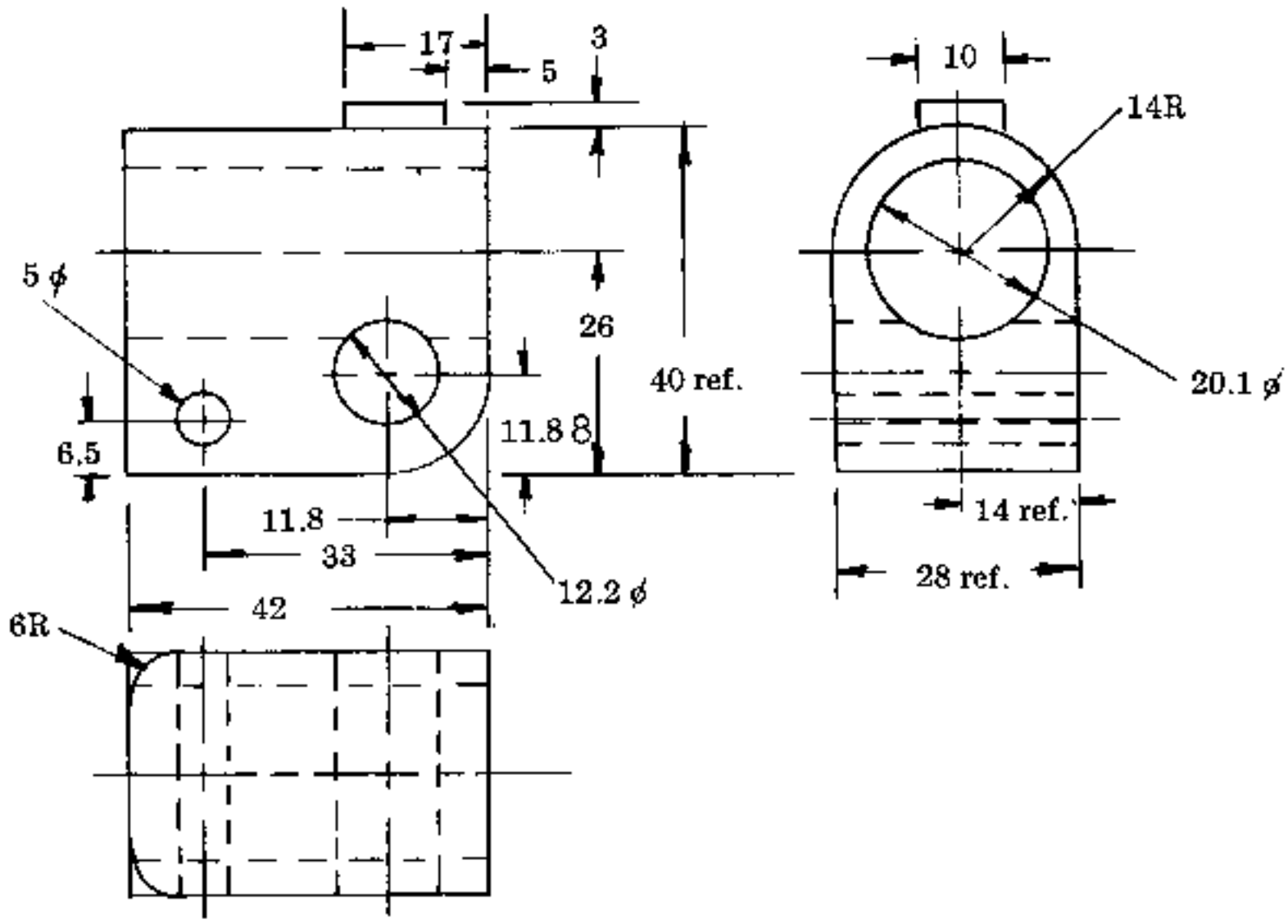

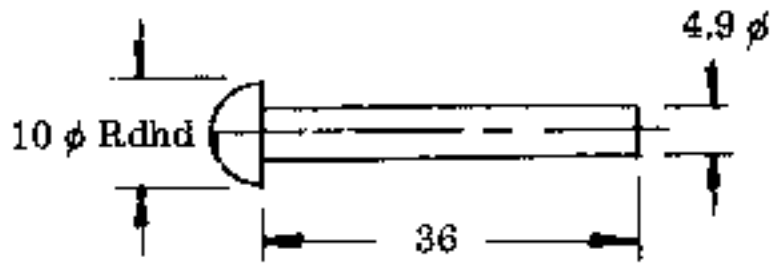

Barrel sleeve rivet
Material: steel
Scale: 1 : 1

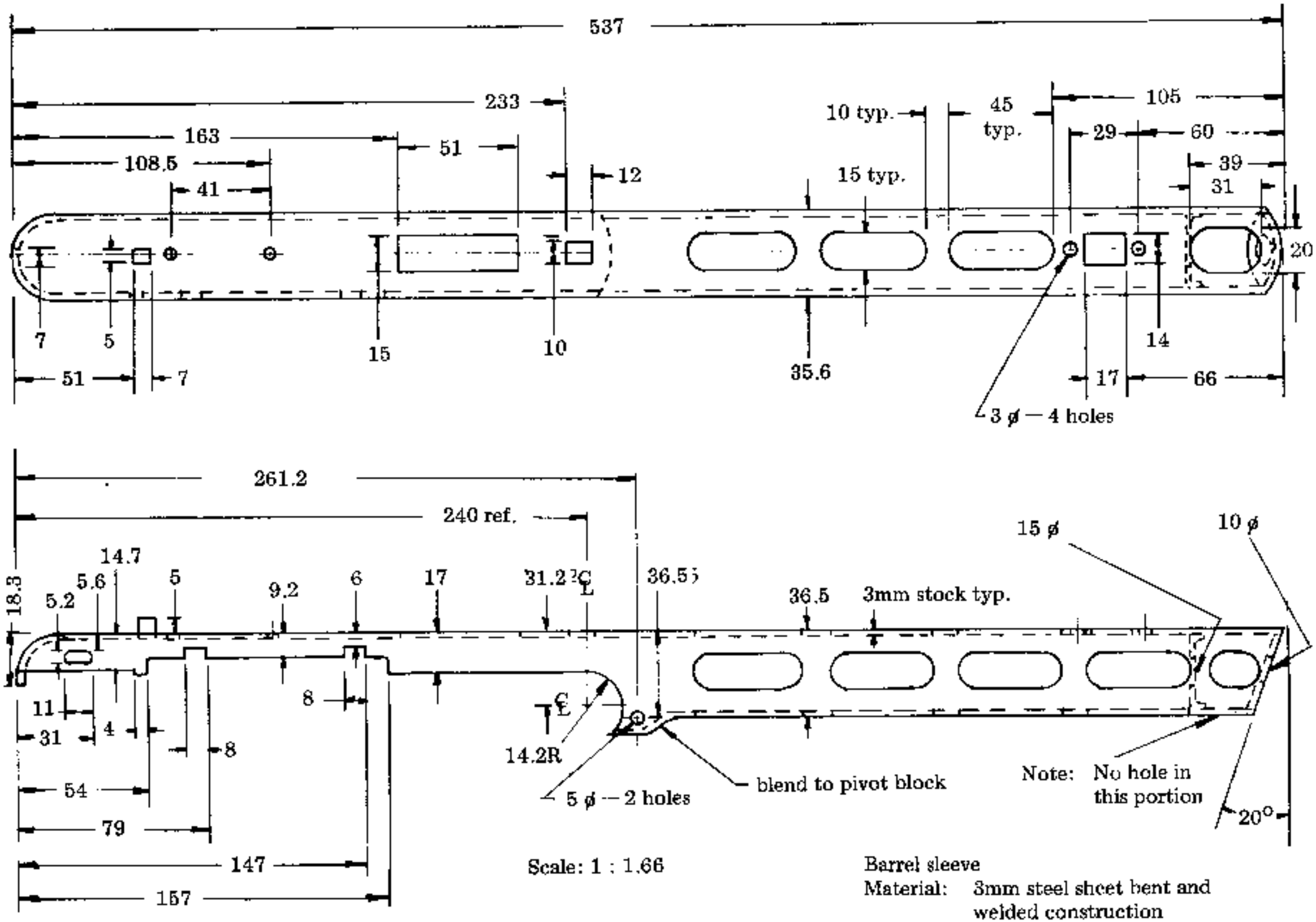
537
233
163
108.5
41
51
12
10 typ.
15 typ.
45 typ.
105
29
60
39
31
20
7
5
51
7
15
10
35.6
14
17
66
3 ø — 4 holes
261.2
240 ref.
14.7
18.3
5.2
5.6
5
9.2
6
17
31.2
36.5
36.5
3mm stock typ.
15 ø
10 ø
11
31
4
8
8
54
79
147
157
14.2R
5 ø — 2 holes
blend to pivot block
Note: No hole in this portion
20°
Scale: 1 : 1.66
Barrel sleeve
Material: 3mm steel sheet bent and welded construction

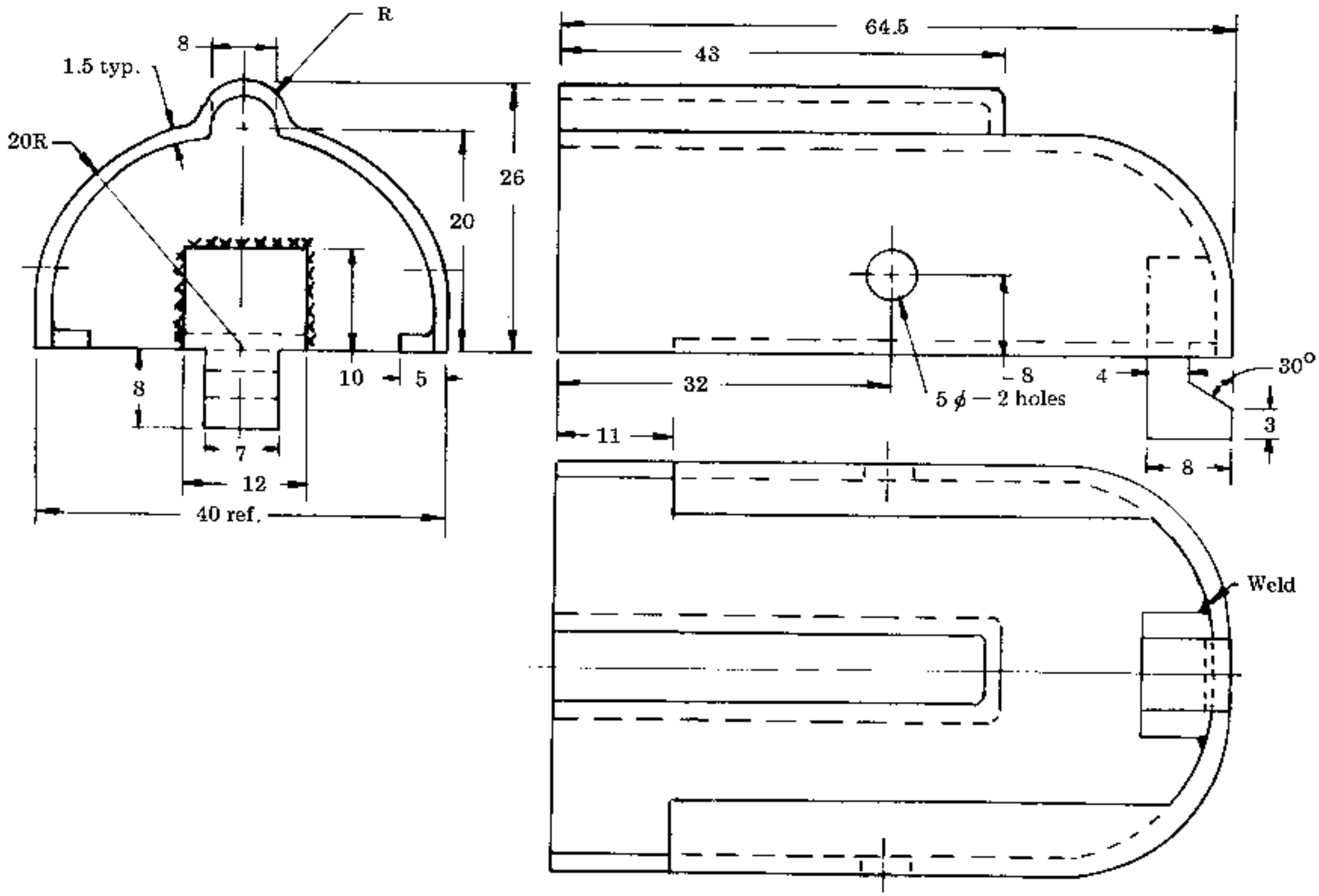

Receiver catch
Material: steel
Scale: 1.74 : 1

Bolt
Material: steel

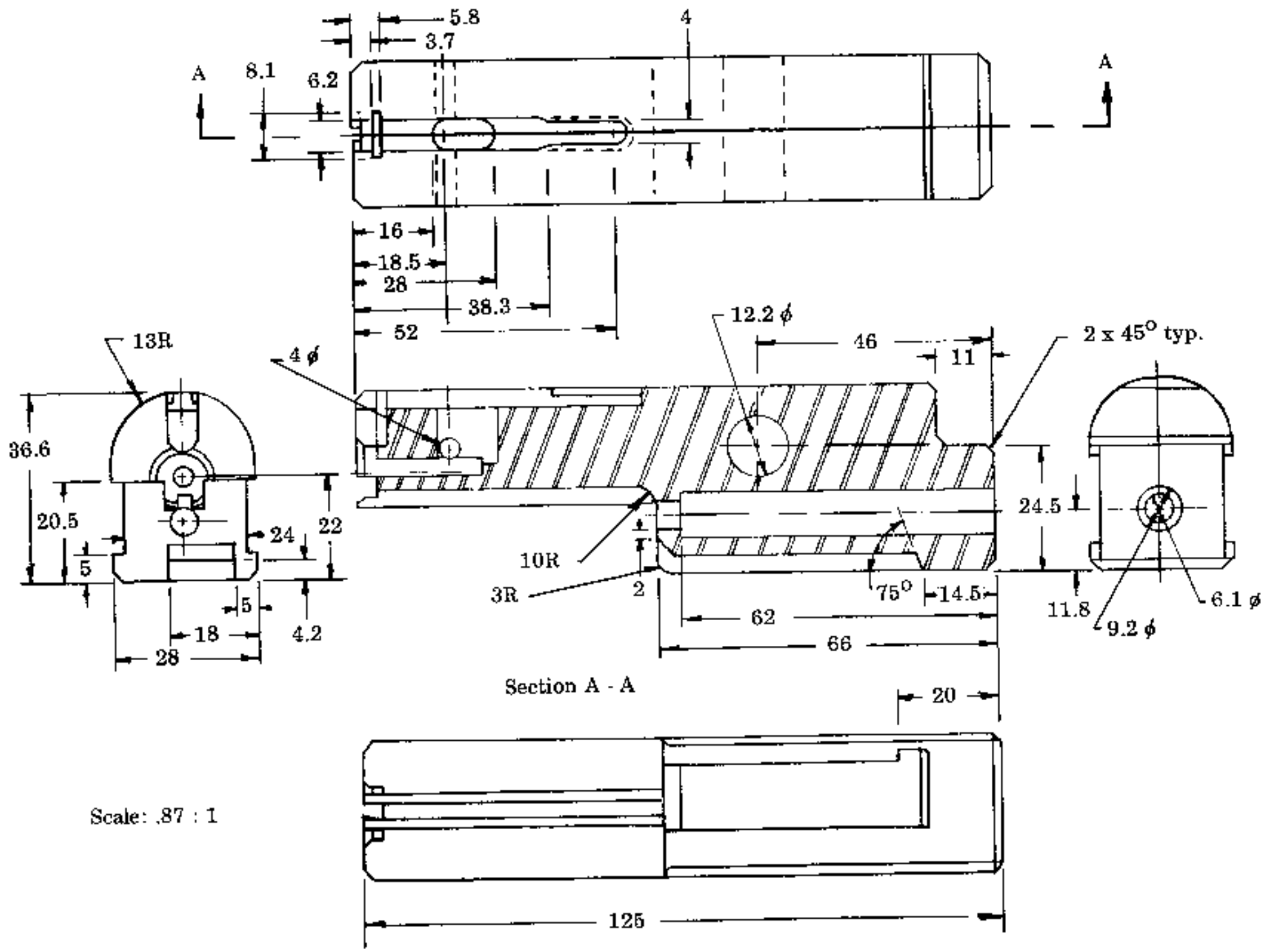

Scale: .87 : 1

Bolt face detail

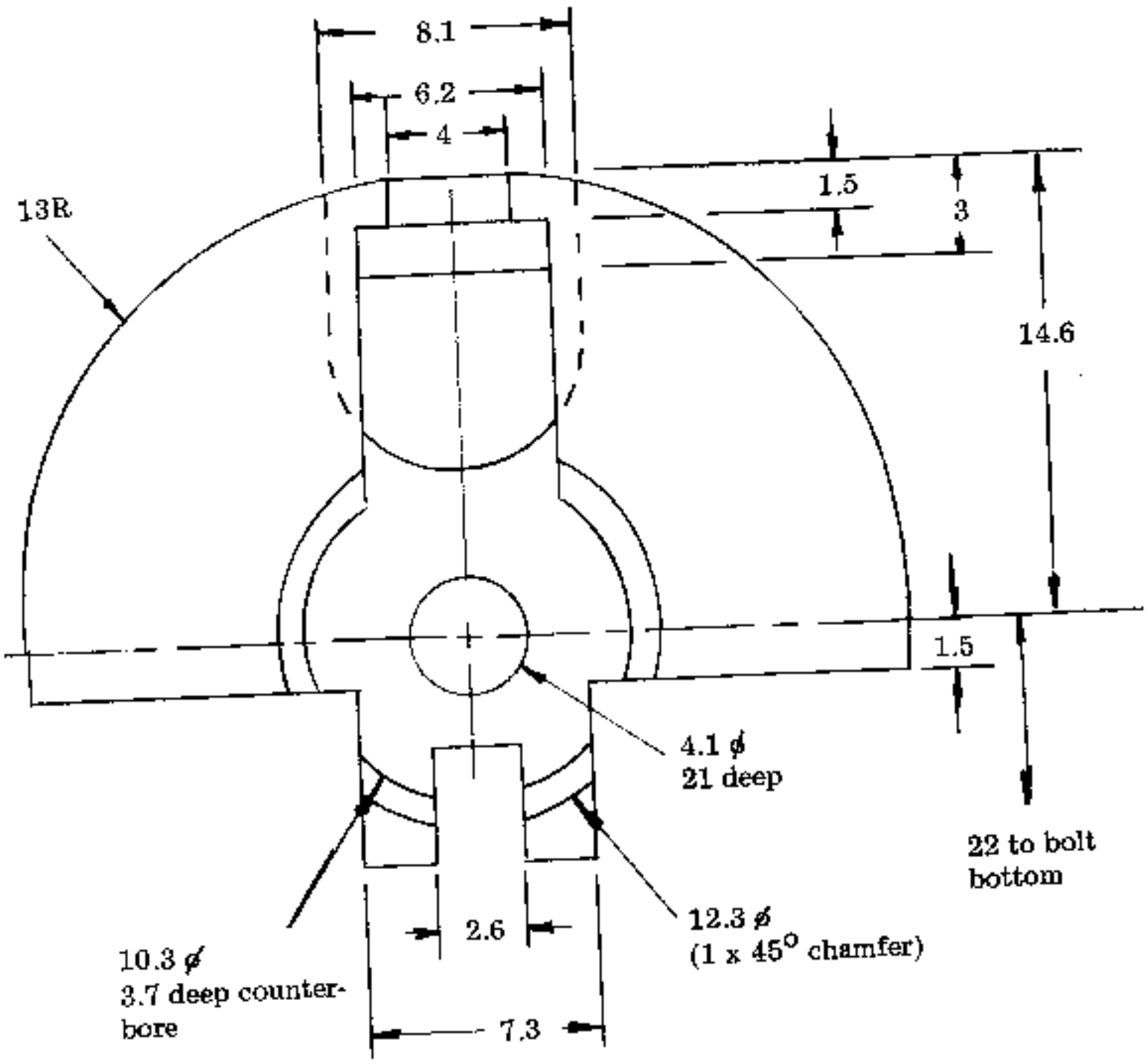

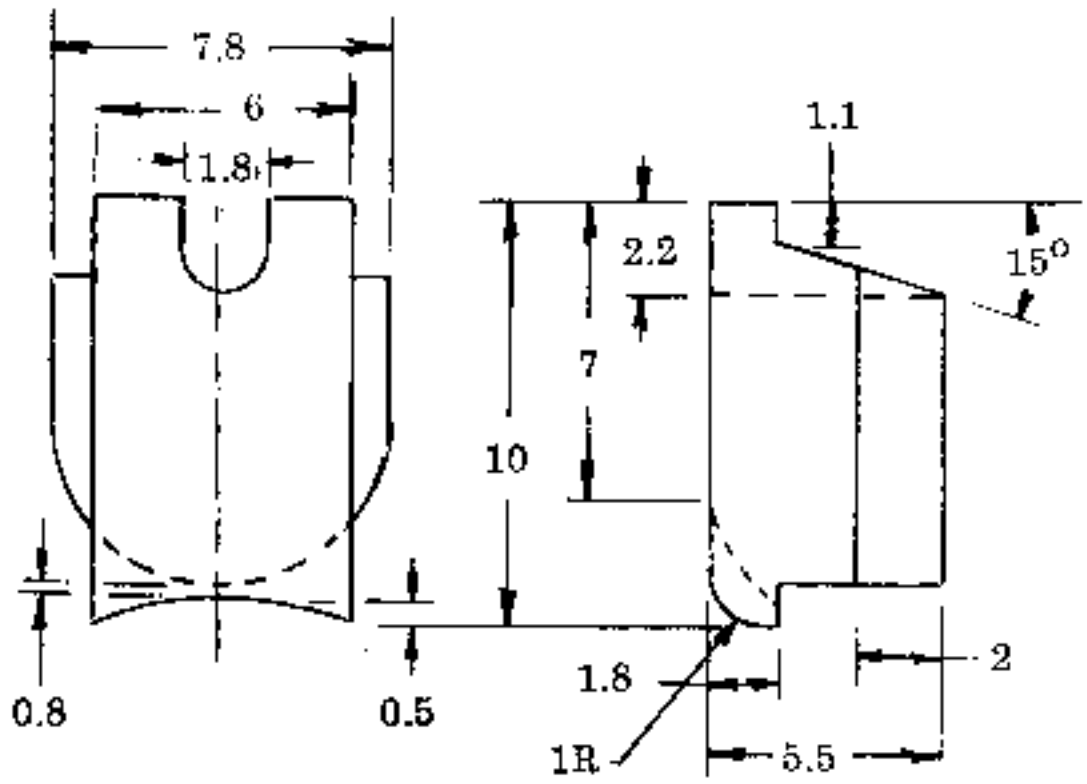

Extractor
Material: 4140 steel
Rc 52-55
Scale: 4 : 1

Bolt handle
Material: steel
Scale: 2 : 1

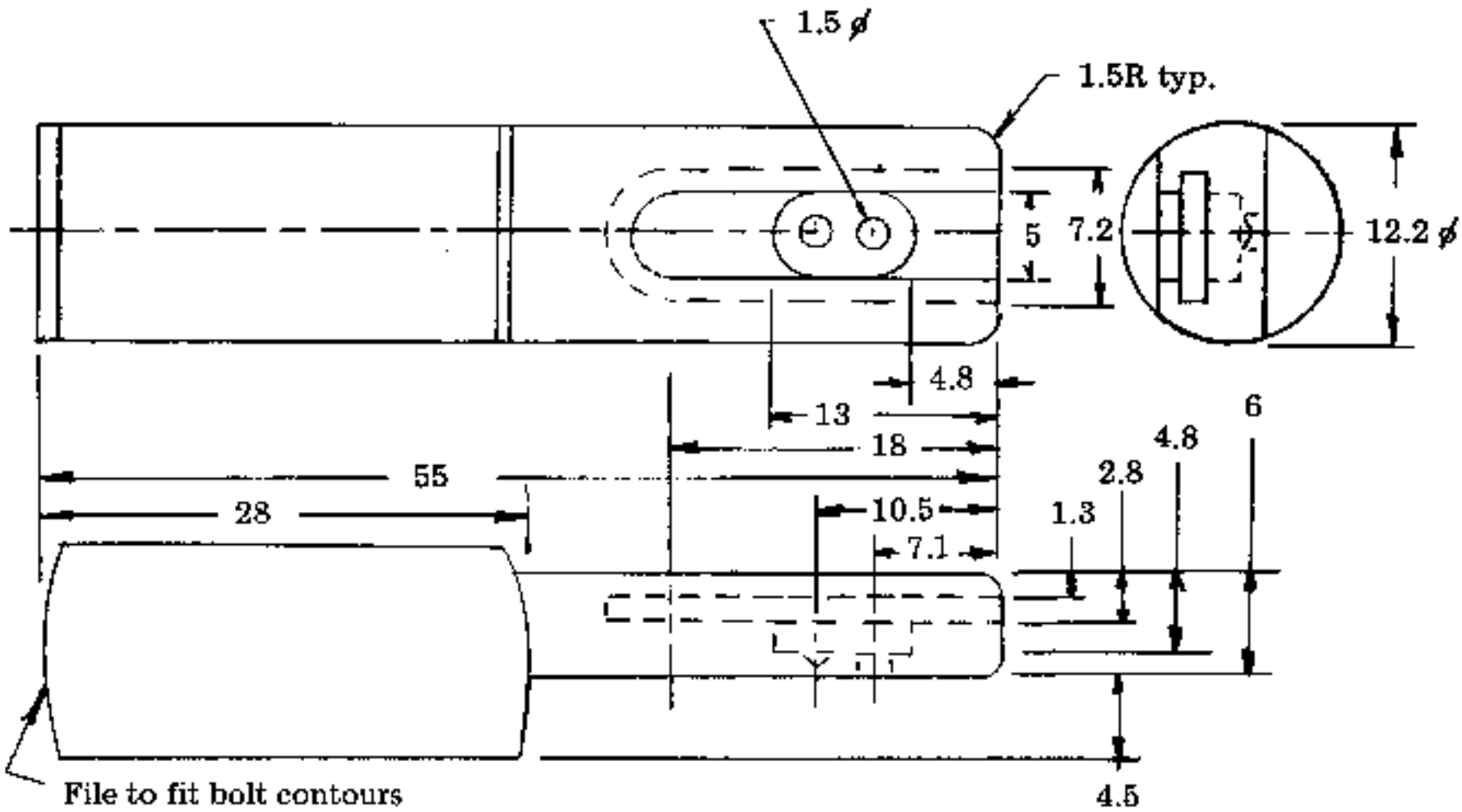

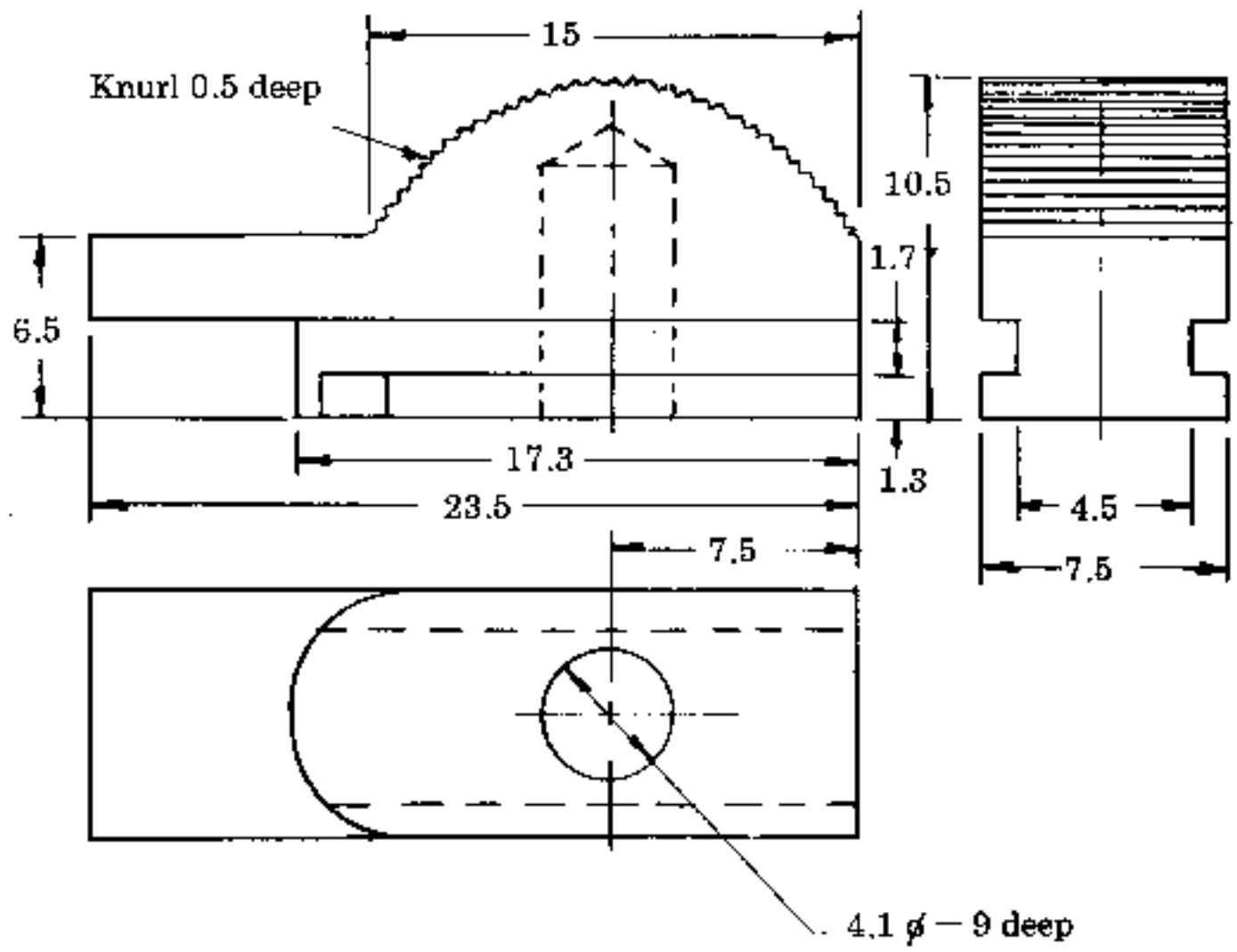

Safety
Material: Steel
Scale: 3.48 : 1

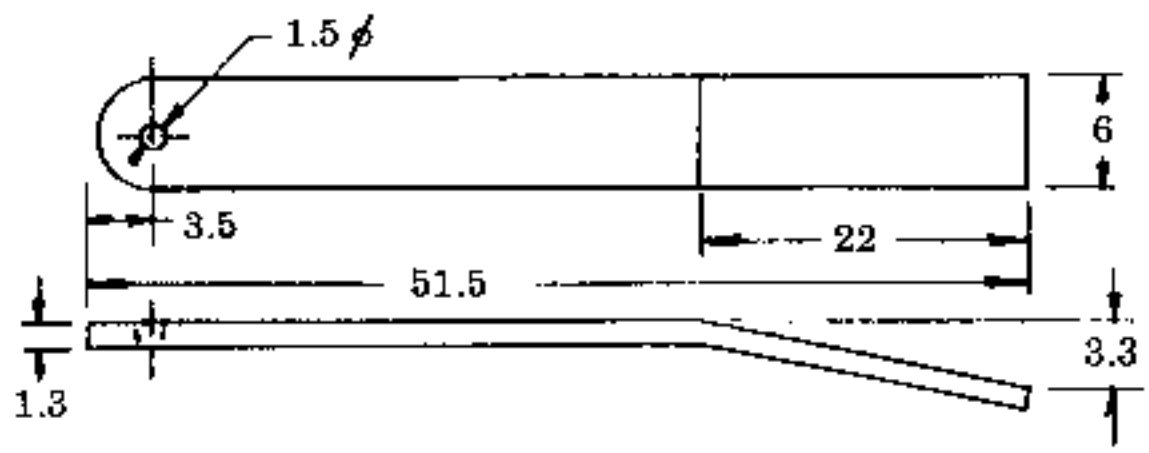

Extractor spring
Material: spring stock
Scale: 1.74 : 1

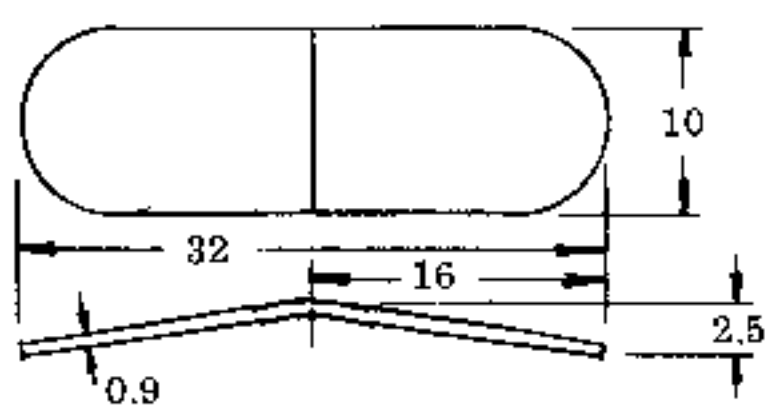

Rear sight spring
Material: spring stock
Scale: 1.74 : 1

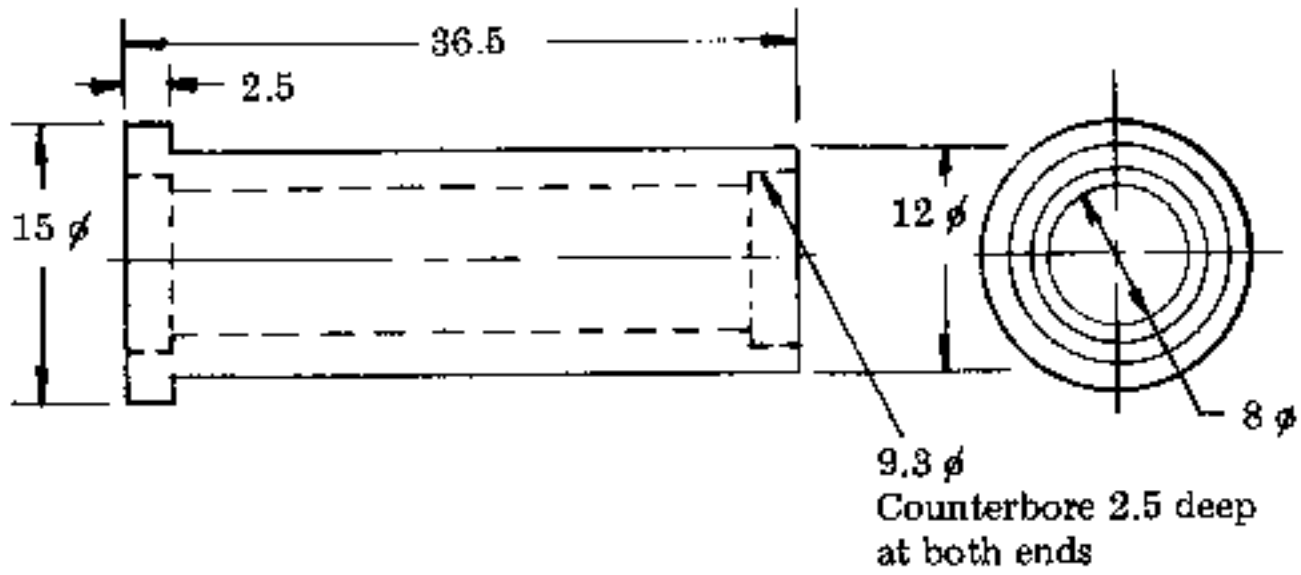

Barrel pivot pin
Material: steel
Scale: 1.74 : 1

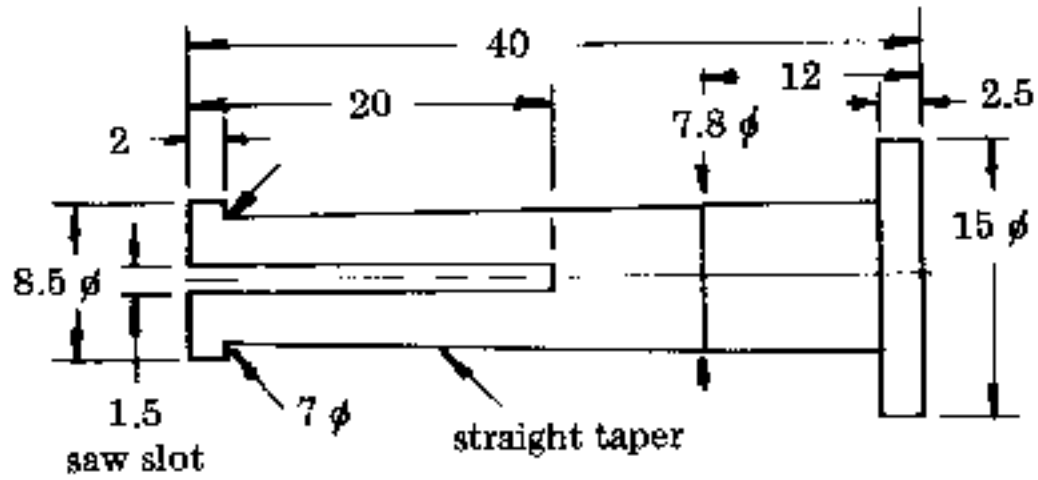

Barrel pivot pin lock
Material: steel
Scale: 1.74 : 1

Ejector
Material: steel
Scale: 1.74 : 1

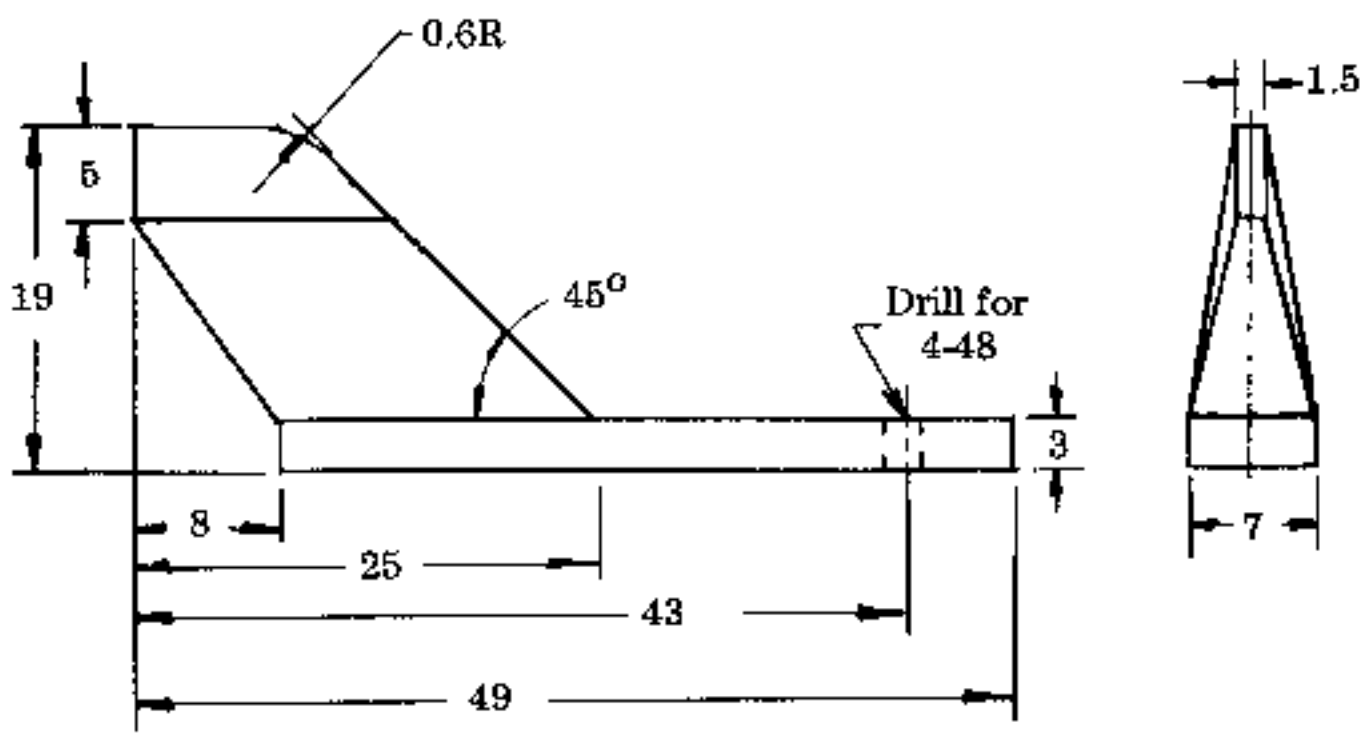

Main spring guide
Material: steel
Scale: 3.48 : 1

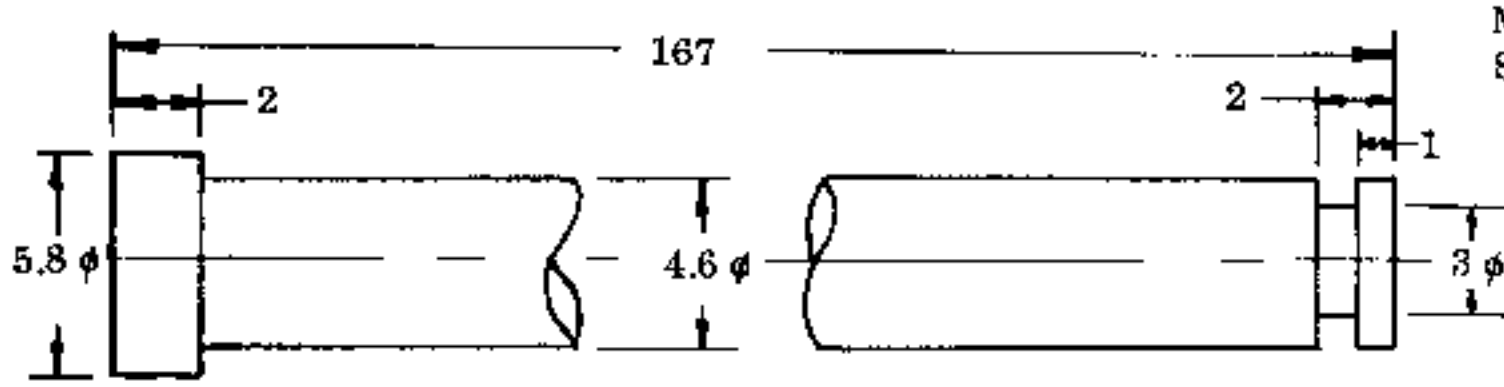

Bolt buffer
Material: plastic
Scale: 1.74 : 1

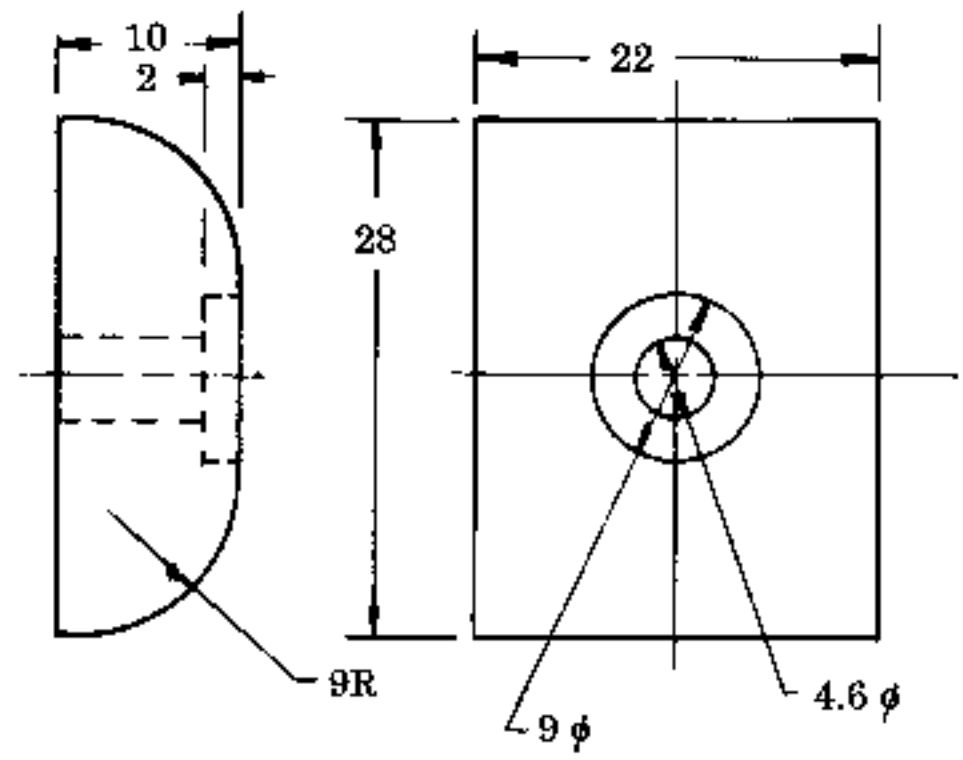

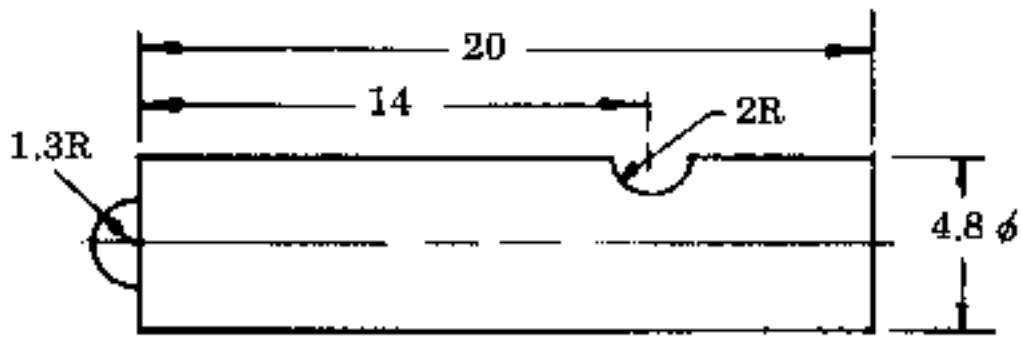

Firing pin
Material: 4140 steel
Rc 55-60
Scale: 3.48 : 1

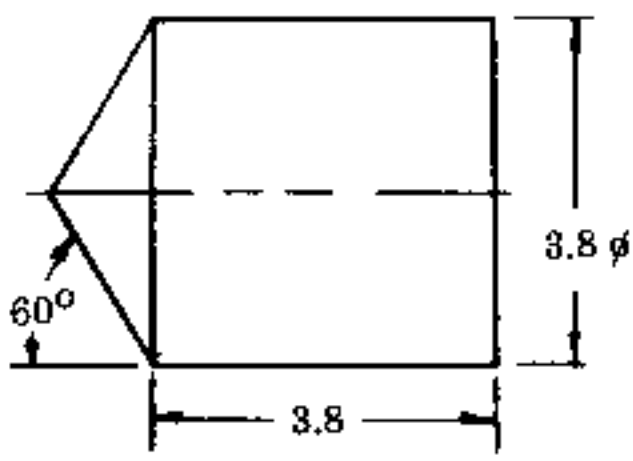

Safety plunger
Material: 4140 steel
Rc 55-60
Scale: 8.7 : 1

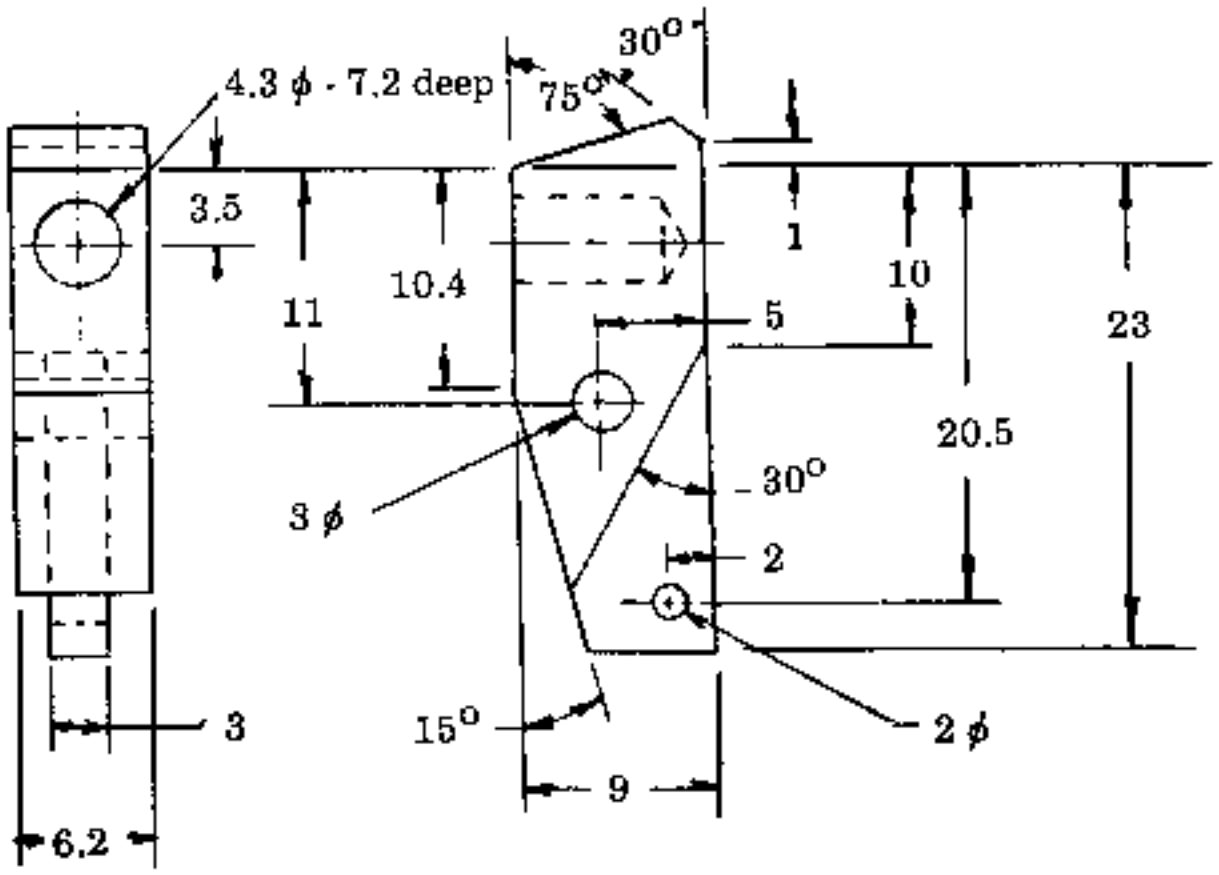
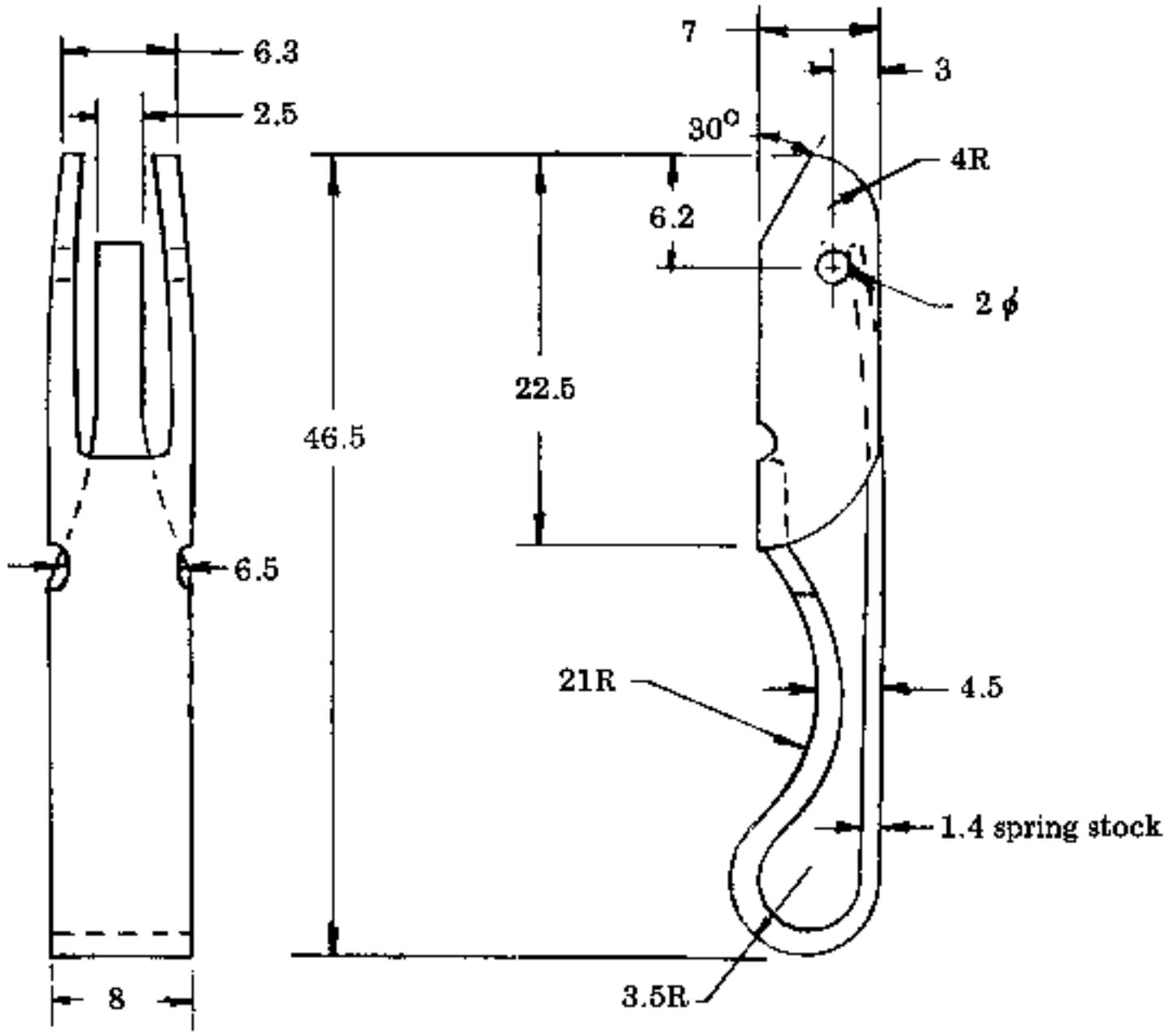
Magazine latch
Material: steel
Rc 50-55
Scale: 2:1